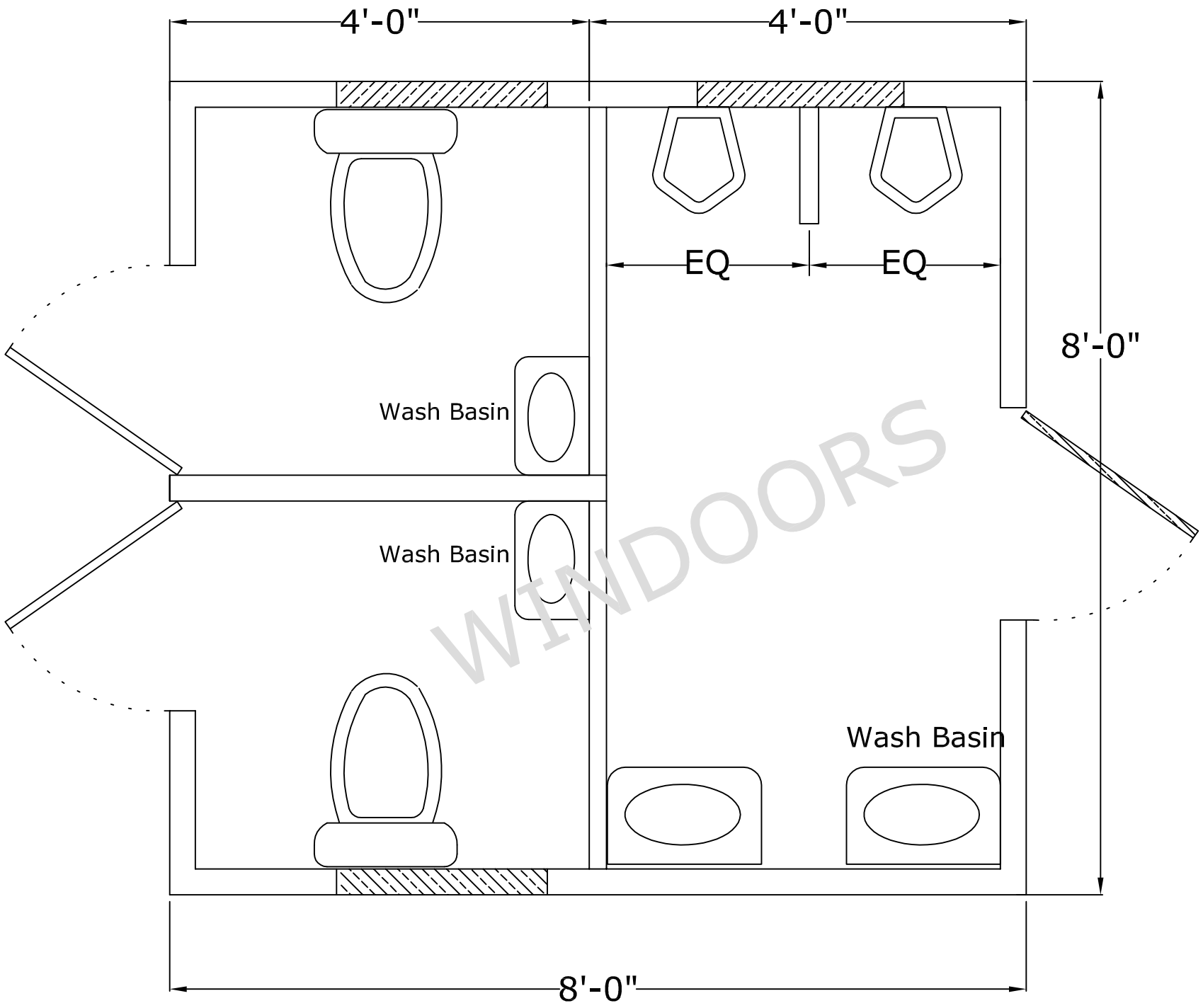

WINDOORS